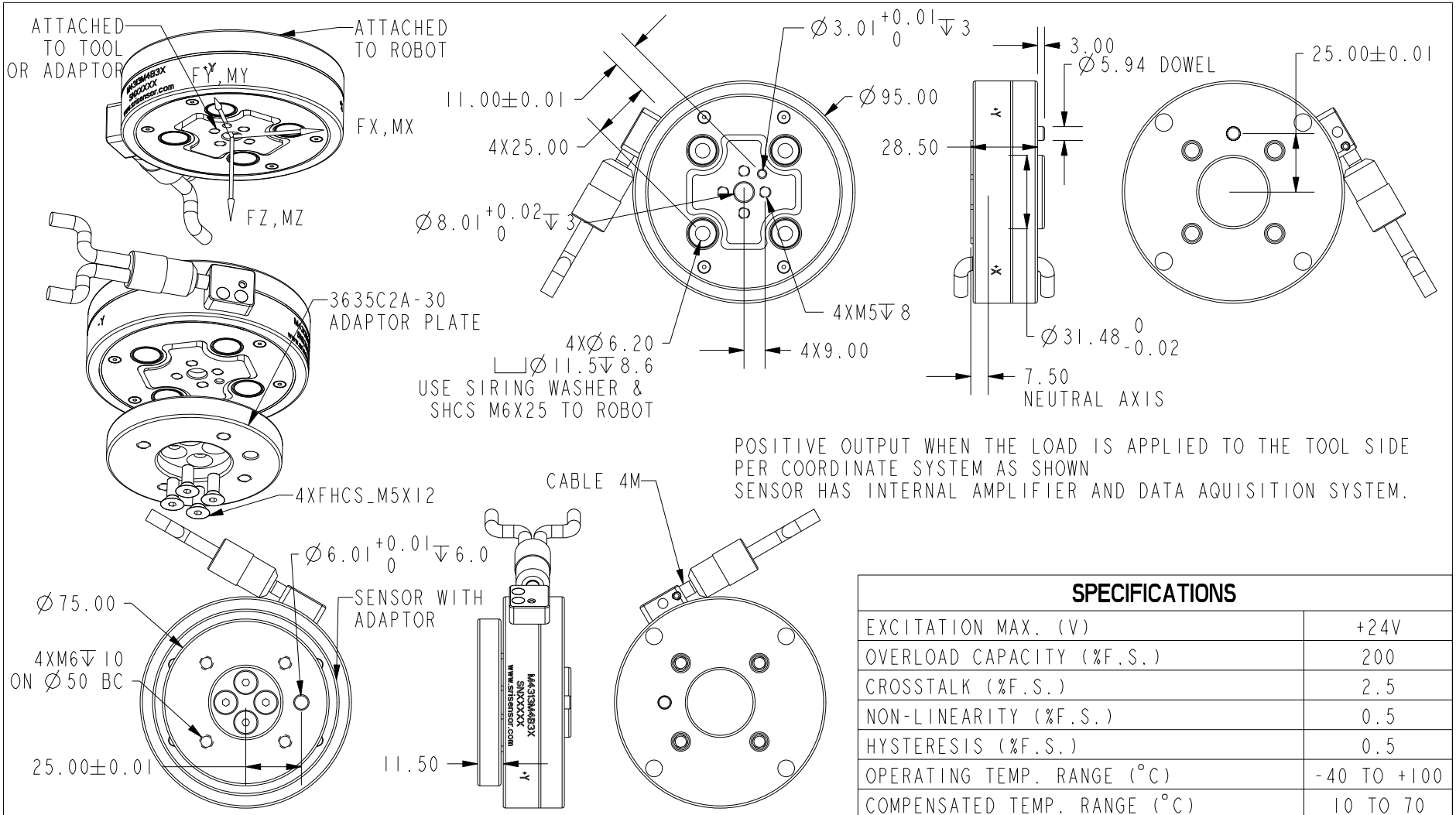

SPECIFICATIONS

EXCITATION MAX. (V)	+24V
OVERLOAD CAPACITY (%F.S.)	200
CROSSTALK (%F.S.)	2.5
NON-LINEARITY (%F.S.)	0.5
HYSTERESIS (%F.S.)	0.5
OPERATING TEMP. RANGE (°C)	-40 TO +100
COMPENSATED TEMP. RANGE (°C)	10 TO 70
MASS (KG) NOT INCLUDING ADAPTOR	0.36

CONNECTOR PIN ASSIGNMENT

COLOR	FUNCTION	COLOR	FUNCTION
1 BLUE	+24V	5 WHITE/GREEN	RDP
2 WHITE/BLUE	GND	6 GREEN	RDN
3 WHITE/ORANGE	TDP	7 WHITE/BROWN	RX
4 ORANGE	TDN	8 BROWN	TX

	Fx (N)	Fy (N)	Fz (N)	Mx (Nm)	My (Nm)	Mz (Nm)
CAPACITY	250	250	250	NA	NA	NA
RESOLUTION	0.1	0.1	0.1	NA	NA	NA

SUNRISE INSTRUMENTS

www.srisensor.com

SIX AXIS CIRCULAR LOAD CELL
D95MM F250N, ETHERNET TCP

UNLESS OTHERWISE SPECIFIED DIMENSIONS ARE IN MM

M4313M4B3X

REV. A