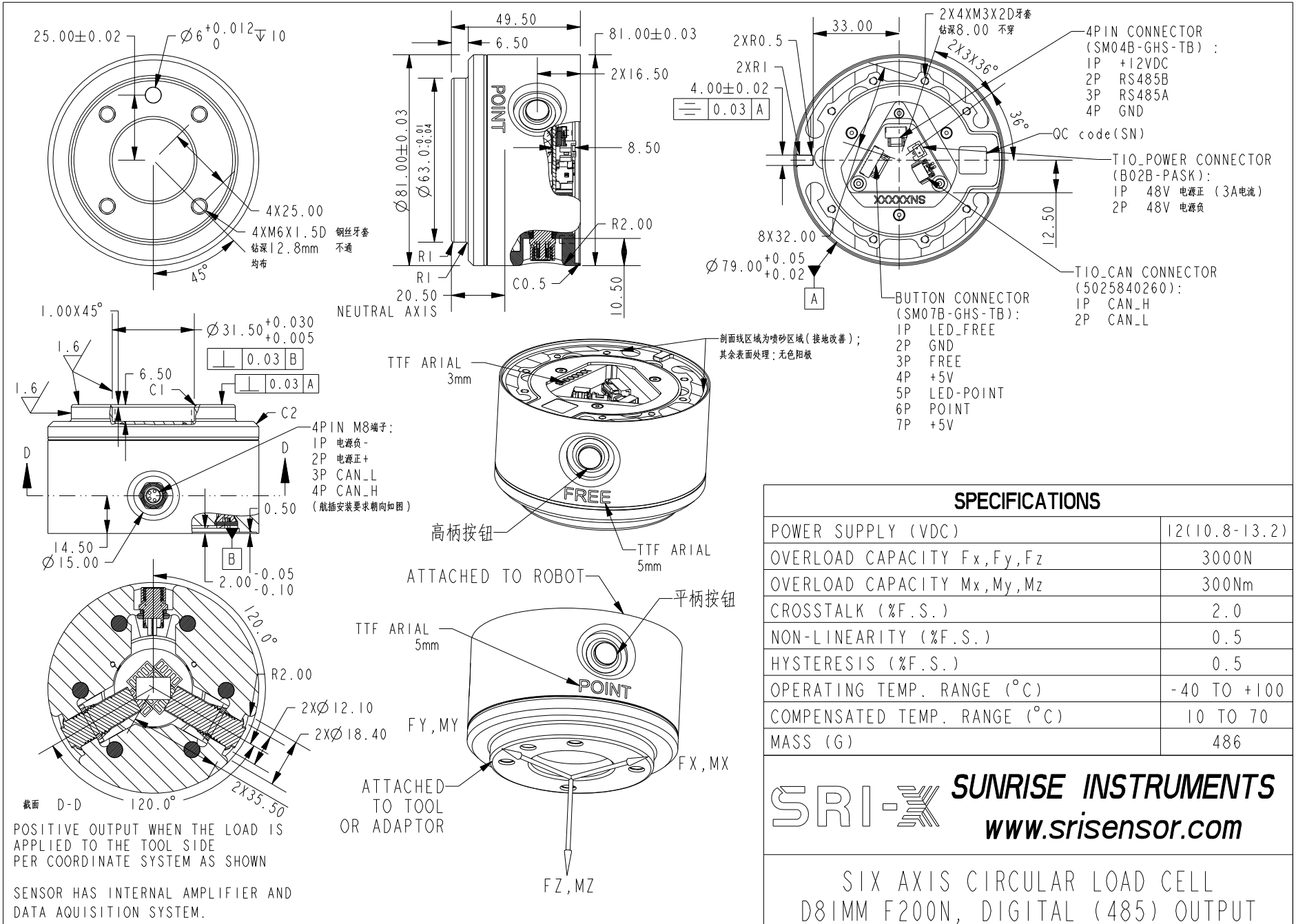

POSITIVE OUTPUT WHEN THE LOAD IS APPLIED TO THE TOOL SIDE PER COORDINATE SYSTEM AS SHOWN

SENSOR HAS INTERNAL AMPLIFIER AND DATA AQUISITION SYSTEM.

SPECIFICATIONS

POWER SUPPLY (VDC)	12(10.8-13.2)
OVERLOAD CAPACITY Fx,Fy,Fz	3000N
OVERLOAD CAPACITY Mx,My,Mz	300Nm
CROSSTALK (%F.S.)	2.0
NON-LINEARITY (%F.S.)	0.5
HYSTERESIS (%F.S.)	0.5
OPERATING TEMP. RANGE (°C)	-40 TO +100
COMPENSATED TEMP. RANGE (°C)	10 TO 70
MASS (G)	486

SUNRISE INSTRUMENTS
www.srisensor.com

SIX AXIS CIRCULAR LOAD CELL
D81MM F200N, DIGITAL (485) OUTPUT

	Fx	Fy	Fz	Mx	My	Mz
CAPACITY	200N	200N	200N	24Nm	24Nm	24Nm

UNLESS OTHERWISE SPECIFIED DIMENSIONS ARE IN MM

M3635F3A1

REV. D