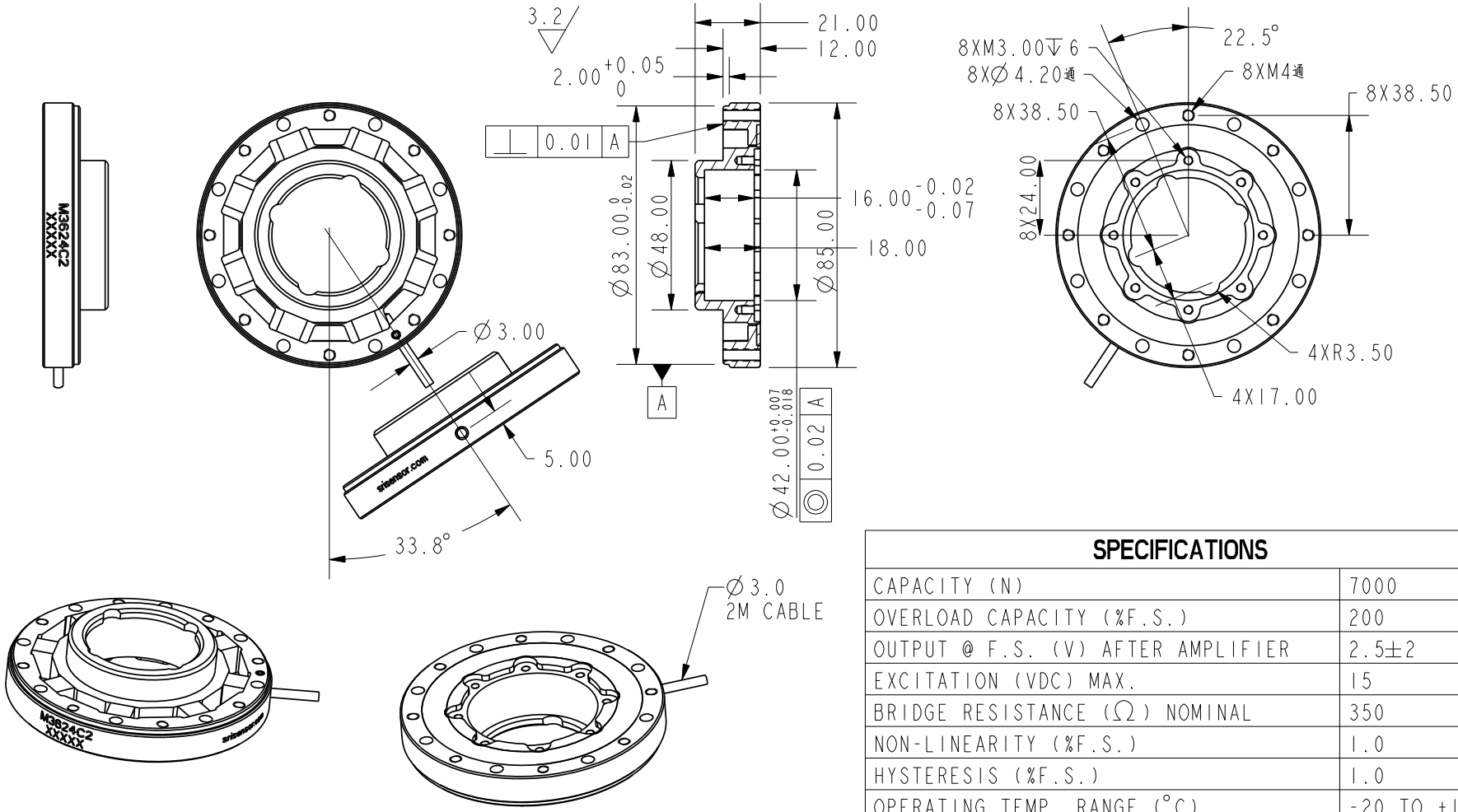

SPECIFICATIONS	
CAPACITY (N)	7000
OVERLOAD CAPACITY (%F.S.)	200
OUTPUT @ F.S. (V) AFTER AMPLIFIER	2.5±2
EXCITATION (VDC) MAX.	15
BRIDGE RESISTANCE (Ω) NOMINAL	350
NON-LINEARITY (%F.S.)	1.0
HYSTERESIS (%F.S.)	1.0
OPERATING TEMP. RANGE (°C)	-20 TO +100
CROSSTALK (%F.S.)	N/A
MASS (KG)	0.12

WIRING CODE	
COLOR	FUNCTION
RED	+EXC
GREEN	+SIG
BLACK	-EXC
BROWN	-SIG

SUNRISE INSTRUMENTS

www.srisensor.com

UNIAXIAL LOADCELL 7000 N

UNLESS OTHERWISE SPECIFIED DIMENSIONS ARE IN MM	M3624C2	REV. C